high voltage

iseg Spezialelektronik GmbH

Operator's Manual

High Voltage Power Supply of the device class HPS (LPS) 2nd Generation, 10 kW, 19“

iseg Spezialelektronik GmbH
Bautzner Landstr. 23
D - 01454 Radeberg/ Rossendorf

Email: sales@iseg-hv.de
http://www.iseg-hv.de

Tel ++ 49 (0)351 / 26 996 - 0
Fax ++ 49 (0)351 / 26 996 - 21

Attention

The unit must not be operated with the cover removed to avoid the possibility of lethal shock to the operator!

There are no user maintainable parts inside the power supply!

Unit may only be operated with protective ground conductor connected.

We decline all responsibility for damages and injuries caused by an improper use of the device. It is strongly recommended to read the manual before operation!

All information in this document is subject to change without notice. We take no responsibility for any error in this document. We reserve the right to make changes in the product design without any notification to the users.

Warning! **notes in the text call attention to hazards in operation of these units that could lead to possible injury or death.**

Caution! **notes in the text indicate procedures to be followed to avoid possible damage to equipment.**

Revision: 2012-12-18_eng

Table of contents

1 Safety instructions ... 7
2 Technical data ... 8
2.1 Device class ... 8
2.2 Electrical wiring of the high voltage output ... 9
2.3 Dimensions ... 10
3 Functional description ... 11
4 Features ... 12
4.1 Operation states ... 12
4.2 Monitoring ... 12
4.3 ARC Management ... 13
4.4 Interlock ... 13
4.5 LEDs ... 14
5 Pinout ... 15
5.1 Supply ... 15
5.2 HV connection ... 15
5.3 0V and X ... 15
5.4 USB connection ... 15
5.5 IL connection ... 15
5.6 CAN connection ... 15
5.7 IEEE 488 connection ... 16
5.8 Ethernet connection ... 16
5.9 AIO connection ... 16
5.10 SPS connection ... 16
6 Front panel operation (optional) ... 17
6.1 Displays ... 17
6.2 Menu ... 18
7 Interface control ... 19
7.1 Description of the RS-232- / USB interface ... 19
7.2 Description of the CAN interface ... 26
7.3 Description of the IEEE-488 Interface (GPIB) ... 27
7.4 Description of the Ethernet interface ... 28
7.5 Description of the Analogue I/O interface (AIO) ... 31
7.6 Description of the SPS interface ... 33
8 SCPI command set with EDCP ... 36
8.1 Introduction ... 36
8.2 Output formats for voltage and current: ... 38
8.3 Channel status (read access) ... 40
8.4 Channel event status (read/write access) ... 41
8.5 Modul-Status (read access) ... 42

8.6 Module event status (read/write access) ... 42
9 Further Command Sets ... 43
10 Error ... 43
10.1 Error acknowledgement ... 43
10.2 Error messages on the LC-Displays ... 43
10.3 Further Errors ... 44
11 Maintenance ... 44

List of figures

Figure 2.1: Electrical wiring of the high voltage output ... 9
Figure 2.2: Dimensioned drawing (in mm), standard version of the rear panel ... 10
Figure 4.1: Operating area of the device ... 12
Figure 7.1: ARC Management ... 13
Figure 4.1: Back panel of the device, two HV outputs ... 15
Figure 5.1: Front panel with rotary encoder and displays (LCD) ... 17
Figure 5.2: Set values on display ... 17
Figure 5.3: Measured values on display ... 17
Figure 6.1: Installation USB driver, dialog 1 ... 20
Figure 6.2: Installation USB driver, dialog 2 ... 21
Figure 6.3: Installation USB driver, dialog 3 ... 21
Figure 6.4: Installation USB driver, final dialog ... 22
Figure 6.5: Device manager ... 22
Figure 6.6: HyperTerminal, New Connection ... 23
Figure 6.7: Serial port ... 23
Figure 6.8: Interface parameters ... 24
Figure 6.9: ASCII configuration ... 24
Figure 6.10: Communication with the device ... 25
Figure 6.11: Ethernet configuration ... 28
Figure 6.12: Lantronix configuration program ... 28
Figure 6.13: Electrical wiring of the output signals ... 31
Figure 6.14: Electrical wiring of the output signals ... 34

List of tables

Table 2.1: Technical data, device class 8
Table 2.2: Continuation: technical data, device class 9
Table 7.1: Parameters of the ARC Management 13
Table 5.1: Description of the individual menu items 18
Table 6.1: Electrical wiring of the RS232 Interface 19
Table 6.2: Pinout CAN connector 26
Table 6.3: Factory Ethernet Settings 29
Table 6.4: Principle sequence of communication between PC and HV unit 29
Table 6.5: Pinout AIO, male D Sub 9 connector 31
Table 6.6: Pinout AIO, male D Sub 9 connector 33
Table 6.7: Pinout DIO, female D SUB 9 connector 33
Table 8.1: SCPI command set with EDCP 36
Table 8.2: Continuation: SCPI command set with EDCP 37
Table 8.3: Continuation: SCPI command set with EDCP 38
Table 8.4: Output format for voltage 38
Table 8.5: Output format for current 38
Table 8.6: Channel Status Register 40
Table 8.7: Explanation of individual bits of the cannel status Registers 40
Table 8.8: Channel event status Register 41
Table 8.9: Explanation of individual bits of the cannel event status registers 41
Table 8.10: Module status Register 42
Table 8.11: Explanation of the individual bits of the module status Registers 42
Table 8.12: Module event status Register 42
Table 8.13: Explanation of the individual bits of the module status event Registers 42
Table 10.1: Error messages on the LC-Displays 43
Table 10.2: Further Errors 44

iseg Spezialelektronik GmbH
Bautzner Landstr. 23
D - 01454 Radeberg/ Rossendorf
Email: sales@iseg-hv.de
http://www.iseg-hv.de
Tel ++ 49 (0)351 / 26 996 - 0
Fax ++ 49 (0)351 / 26 996 - 21

1 Safety instructions

This High Voltage Power Supply has to be installed by trained and qualified personnel only.

Following instructions are made for the personal safety of the operator, the safe use of this product and the connected devices.

Warning! **High voltage power supplies of the device class HPS(LPS) 2nd Generation, 10 kW, 19“ are supplied from three phase mains voltage and generates an output voltage up to 20 kV. The disregard of this voltage condition can cause death, heavy injuries or material damage.**

Before connecting to the local mains it must be made sure that the nominal line voltage of this unit matches to the local mains.

The power input has to be fused with not less than 25 A, with slow delay.

After system assembly the connections with the protective ground have to be checked for proper connection!

The delivered HV cable has to be connected to the load properly and isolated according to proof-voltage.

The shield of the HV cable is always connected to the housing. It can be used as return if the connectors “0V” and “X” are short circuited.

If the short circuit between the connectors “0V” and “X” is removed, as return an additional wire has to be used with a bare area of at least 4 mm². This wire has to be connected with “0V”. The potential between the connector “0V“ and the protective ground can be ± 200 V..

Warning! **The user has to ensure that no danger will occur because of the voltage between the return conductor and the protective ground!**

If the potential between the return conductor and the protective ground will be larger than |200| V then the connectors will be short circuited via an electronically protection circuit to avoid damages of the power supply.

An air flow rate of 360 m³/h has to be guaranteed under any circumstances. Therefore do not cover any air input or output slots.

The unit can be operated with an ambient temperature of 0°C to 50°C.

Warning! **When operating with an ambient temperature above 35°C the temperature of the mains switch and the front panel may rise above 45°C!**

Warning! **It is strictly forbidden to remove the cover of the power supply, to avoid the possibility of lethal shock to the operator! Before operations at the load or the high voltage output of the power supply are started, the high voltage output of the power supply must be properly grounded.**

2 Technical data

2.1 Device class

Table 2.1: Technical data, device class

Device class HPS(LPS) 2nd Generation, 10 kW, 19“								
Output power P_{nom} [kW]		10						
Output voltage V_{nom} [kV]		1	2	3	5	6	10	20
Output current I_{nom} [A]		10	5	3.4	2	1.7	1	0.5
HV-connector		GES 11 HBT[1)]	LEMO PSA.3S.CTA.C62[1)]					GES 21 HBT[1)]
Polarity		x, n → negative or p → positive						
Efficiency		> 93% (V_{in} = 400 V, P_{nom})						
Ripple and noise		Voltage control: $\Delta v < 0.9\% * V_{nom}$ [1)] Current control: $\Delta i < 2\% * I_{nom}$ [1)]						
Stability		$\Delta v < 0.1\% * V_{nom}$ (for 8 h with constant conditions, after ½ h warmup)						
Voltage regulation		$\Delta v < 0.1\% * V_{nom}$ (Δv_{in}, $0 \le I_{out} \le I_{nom}$)						
Current regulation		$\Delta i < 0.1\ \% * I_{nom}$ (Δv_{in}, $0 \le V_{out} \le V_{nom}$)						
Accuracy		Voltage: $< 1\% * V_{nom}$ for one year current: $< 1\% * I_{nom}$ for one year						
Temperature coefficient		$<2 * 10^{-4}$ /K [1)]						
Control (local, FP)		Optional front panel operation via rotary encoders and displays (LCD)						
Remote control (all interfaces are electrically isolated)	AIO	Analogue signals	Level 0 V – 5 V					
		Digital signals	Low level 0 V - 4 V High level 8 V - 15 V or open					
	USB	Via USB Interface						
	SPS	Optional, separation of analogue (AIO) und digital (DIO) output signals[2)]						
	RS232	Optional, via RS232 Interface[2)]						
	CAN	Optional, via CAN Interface[2)]						
	IEEE	Optional, via IEEE Interface[2)]						
	Ethernet	Optional, via Ethernet Interface[2)]						
Supply		V_{in} = 3 x 400 V – AC ± 10% I_{in} < 22 A (V_{in} = 360 V, P_{nom}) Line frequency 47 Hz < f_l < 63 Hz Internally fused with circuit breaker 3 x 25 A with medium characteristic Inrush current approx. 20 A						
Cooling		Forced cooling with integrated fans (≤ 360 m³/h)						
Monitoring		ARC, three phase mains voltage, auxiliary voltage, over voltage, temperature, Interlock						
ARC-Management with adjustable parameters		ARC-Wait, ARC-Number, ARC-Time, ARC-Ramp-Time						
ARC-current limitation (ACL)		Optional, limitation of the output current during an ARC to less than 5 A, available only at an output voltage of 10 kV [1) 3)]						

Table 2.2: Continuation: technical data, device class

Device class HPS(LPS) 2nd Generation, 10 kW, 19“		
Working conditions		Temperature: 0°C to 50 °C Humidity: 20% to 90%, no condensation
Storage conditions		Temperature: -25°C to 80 °C Humidity: 20% to 90%, no condensation
Electromagnetic compatibility	Emission	EN 55011 (curve A)
	Immunity	EN 61000 4-2, EN 61000 4-3, EN 61000 4-4, EN 61000 4-8
Safety standard		EN 61010-1 (VDE 0411)
Dimensions, Weight		1 kV ≤ V_{nom} ≤ 10 kV: 4U –19“ depth: 500 mm, ca. 29 kg V_{nom} = 20 kV: 4U –19“ depth: 500 mm, ca. 35 kg
Series LPS		Very low output voltage overshoot
HV outputs		Standard 1 HV output Optional 2 HV outputs [1)]
Current measurement of two HV outputs (2HC)		Optional, 2 HV outputs with additional current measurement of both HV outputs Available up to 10 kV output voltage[1), 3)]
Electrically isolated return of the high voltage		Potential difference between return conductor and protective ground up to ± 200 V [1)]

[1)] other values on request

[2)] not all interfaces can be combined

[3)] a combination out of the options ACL and 2HC increases the height of the device to 6 HE

2.2 Electrical wiring of the high voltage output

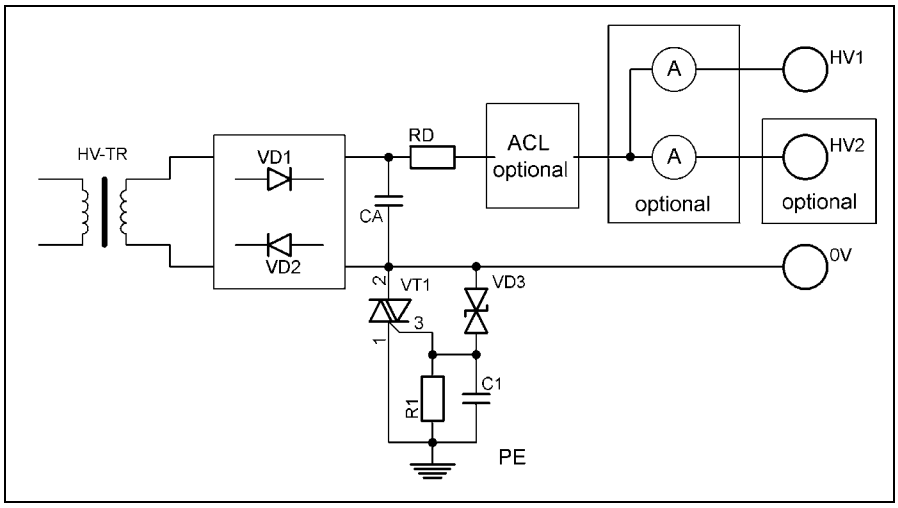

Figure 2.1: Electrical wiring of the high voltage output

2.3 Dimensions

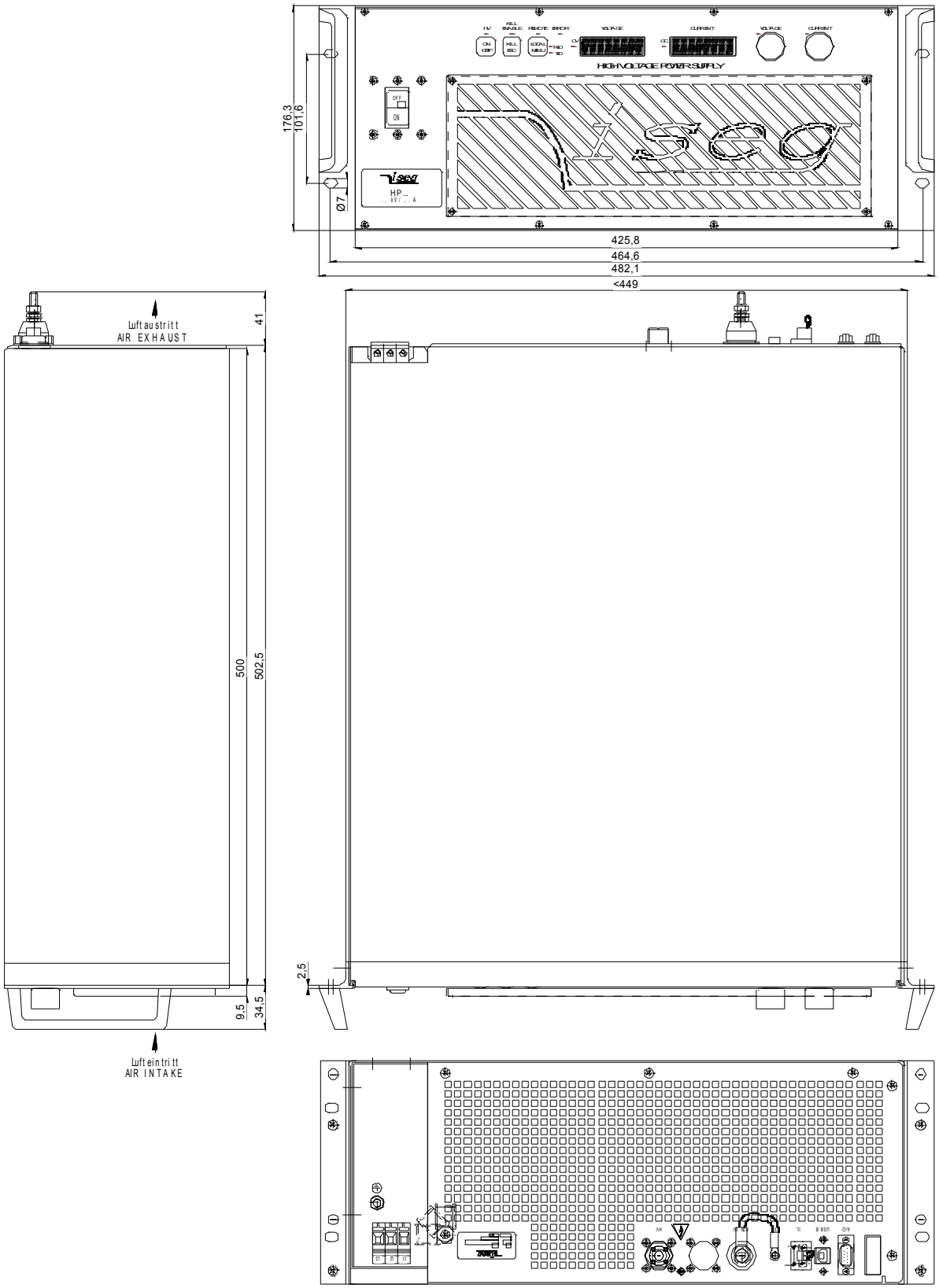

Figure 2.2: Dimensioned drawing (in mm), standard version of the rear panel

3 Functional description

High voltage power supplies of the device class HPS(LPS) 2nd Generation, 10 kW, 19“ are supplied from three phase mains voltage and generates an output voltage up to 20 kV as well as an output current up to 10 A.

The unit can be controlled via

- one D Sub 9 connector with analogue and digital signals (option SPS two D Sub 9 connectors),
- USB interface or
- front panel operation with rotary encoders and displays (optional)

The INHIBIT function is used to disable and block the generation of high voltage.

In the following, the working principle of the power supply will be described:

Next to the mains there is a EMI/RFI filter. A three-phase electric contactor separates the EMI/RFI filter from the rectifier and the inrush current limitation circuit.

The rectifier provides a DC link voltage, which is buffered by an electrolytic capacitor battery. An inverter with a connected resonance circuit transforms the DC-Link voltage into a controllable sinusoidal voltage. The HV-transformer and HV-rectifier provide an output voltage corresponding to the external Set-voltage. Output voltage and current are measured by high precision voltage dividers and a shunt and are fed back to the control circuit. A damping resistor connected to the output capacitance limits the output current during a load change or ARC.

High voltage power supplies of this class work with a self adjusted switching frequency, depending on the systems operating point. The output parameters are controlled via a pulse width modulation (PWM). This control technology guaranties a nearly loss free switching of the power semiconductors.

The control circuit controls and limits the output voltage and current corresponding to the set values. Normalized monitor voltages for voltage and current are provided for read back. The control circuit is also monitoring the input voltages, auxiliary voltages and the temperatures of cooling air and single components.

The power supply is turned ON/OFF with a circuit breaker (switch with integrated fuses) installed at the front panel of the power supply.

The three-phase electric contactor is controlled via a safety loop.

Six LEDs installed at the front panel show different operating conditions of the device. An ARC-management with adjustable parameters is installed in the power supply. The ARC-management parameters can be set via the digital interfaces or the front panel.

4 Features

4.1 Operation states

The device has the following operation states:

- POWER-ON Device initializes the connected Hardware (Booting)
- LOCAL Device is controlled via the front panel
- REMOTE Device is remote controlled via the analogue or digital interfaces

There are two modes for high voltage generation:

1. Constant voltage control CV:
   Control of output voltage according to its set value.
2. Constant current control CC:
   Control of output current according to its set value.

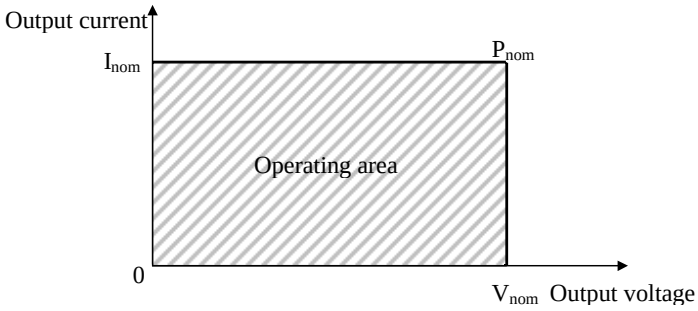

Figure 4.1: Operating area of the device

4.2 Monitoring

Voltage

The three phase mains voltage and the internally auxiliary voltages are monitored. If one of these voltages is out of it's limits, the high voltage generation is stopped and an error (Error supply) is generated (section 10.1).

The maximum voltage value is monitored by the OVP-comparator. The threshold is set to ca. 110 percent of maximum voltage at the factory. If this threshold is reached (e.g. through an internal defect), high voltage generation is stopped. If HV was stopped by OVP-comparator, an error (ERROR OVP) is generated (section 10.1).

Temperature

Temperature is monitored at several points within the unit. High voltage generation is stopped in case of external air temperature exceeds 50°C or internal temperature of several modules exceeds a predefined limiting value. The error (ERROR OVERTEMP) is generated (10.1).

Warning! **When operating with an ambient temperature above 35°C the temperatures of the mains switch and the front panel may rise above 45°C!**

Caution! **The unit is equipped with an air filter. Depending on amount of dust in the environment and the number of operating hours, this filter has to be replaced on a regular basis. The filter can be purchased from iseg Spezialelektronik GmbH. The replacement can be done by the operator after the unit was disconnected from mains net and properly grounded. Therefore 4 screws M3 on the front panel have to be removed.**

4.3 ARC Management

The HV power supply is equipped with an ARC Management with adjustable parameters. Figure 4.2. shows the working principle of the ARC Management.

An ARC is defined as a negative voltage slop with a dv/dt greater than $0.1 \cdot V_{nom}$/µs.

After an ARC was detected, the control signals of the inverter are blocked within some µ-seconds for the blanking time (ARC-Wait, $t_{ARC\text{-}Wait} = t_1 - t_0$).

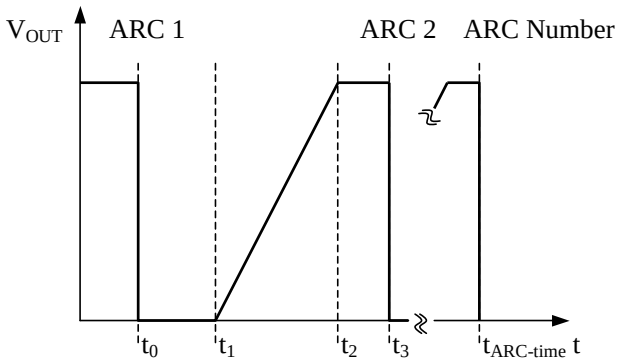

Figure 4.2: ARC Management

At the same time, the internal set value for the output voltage is set to 0. At the time instance $t = t_1$, the internal set value of the output voltage is increased with the voltage ramp (ARC-Ramp).

Detected ARCs are counted. If a predefined number of ARCs (ARC-Number+1) is detected within a predefined time (ARC-Time, $t_{ARC\text{-}time}$), this will be handled as an Error (ARC Error) and generation of high voltage will be stopped (section 10.1).

The parameters in Table 4.1 can be adjusted with the digital interfaces and the front panel.

Table 4.1: Parameters of the ARC Management

parameter	Adjustable range
ARC-Wait	100 ms – > 6 s
ARC-Number	0 – 99
ARC-Time	100 ms - > 10 s
ARC-Ramp-Time	100 ms - > 4 s

The maximum ARC-frequency is limited to 30/s (30 ARCs per second) independently of the defined ARC parameters.

The ARC Management can be turned off via the front panel or the digital interfaces. To protect the power supply from damage, the number of ARCs (ARC-Number) will then be limited to 30 within one second. Furthermore the blanking time (ARC-Wait) will set to 150 µs, the internal set value of the output voltage V_{SET} will not be influenced.

The delivered default condition of the HV supply, the ARC Management is disabled.

4.4 Interlock

The power supply is equipped with a connector for a hardware safety loop (interlock, maximum cross section area 1.5mm²) at the back side.

If the loop is closed an internal current source (open circuit voltage 24 V / short circuit current max. 25 mA) will drive a current of ca. 25 mA through three built-in mechanical relays (certified in accordance with IEC/EN 60950 and UL 60950, fulfils the Telcordia requirements according GR 1089 and FCC part 68) , which are connected in parallel.

The impedance of the closed loop must be less than 300 Ohm.

If the safety loop is open (Impedance > 100 kOhm), the relays will open. The high voltage generation is stopped only by the opened relay contacts. Two of the relays lock the gate pulses of the semiconductors of the inverter. The other relay will force the two power relays to disconnect the mains from the power module of the power supply.

Warning! **The internal and external capacitances must be discharge by the load before the output will be voltage-free. The internal discharge resistors have a high resistance, so a very long discharging time is possible according to the connected load.**

The unit is not equipped with an active discharging circuit! Before operations at the load or the high voltage output of the power supply are started, the high voltage output of the power supply must be properly grounded.

It is not possible to switch on the high voltage generation if the safety loop is open.

The state of the opened safety loop is handled as an error. For releasing the high voltage generation the closed safety loop has to be approved. (section 10.1)..

4.5 LEDs

Six LEDs on the front panel show the current status of the unit:

- PWR — LED is illuminated if unit is switched ON and auxiliary voltages are available
- IL — Interlock, LED is illuminated if Interlock-loop is closed
- HV — HV ready indicator, LED is illuminated if the high voltage generation is started
- ERR — LED is illuminated if one of the following events is or was active:
  1. Threshold (min/max) of the input voltage exceeded,
  2. Threshold of a supporting voltage exceeded,
  3. Temperature threshold exceeded,
  4. Number of ARCs within set time exceeded (see chapter 4.3),
  5. Maximum value of output voltage exceeded,
  6. Reset of the microprocessor,
  7. Safety loop open.
- CV — LED is illuminated if the power supply operates in mode voltage control CV
- CC — LED is illuminated if the power supply operates in mode current control CC

The LEDs are not available, if a front panel with rotary encoders and displays is installed.

5 Pinout

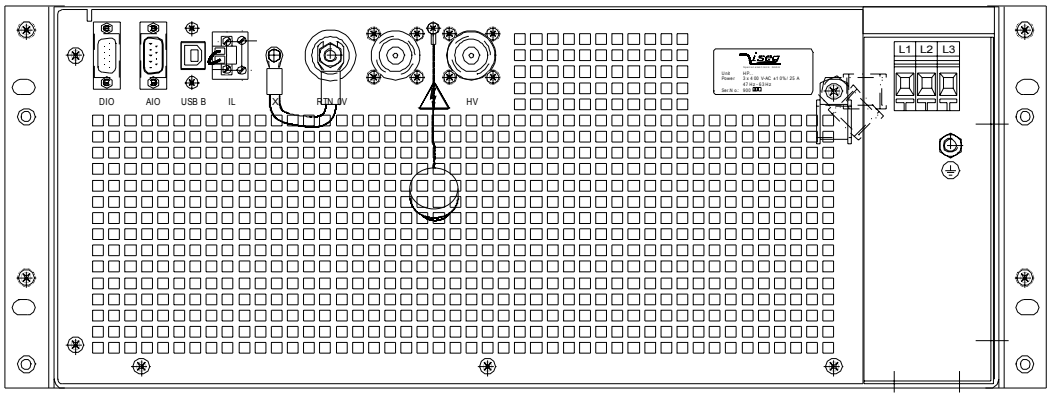

Figure 5.1: Back panel of the device, two HV outputs

5.1 Supply

The unit is connected to three phase mains net using three screw terminals on the back panel. The earth stud marked with “PE” has to be connected to the grounding system. The maximum wire cross section for the screw terminals is 6 mm². The thread of the protective ground stud PE is M5.

Caution! **The neutral wire is not connected to the unit!**

5.2 HV connection

The unit has at least one HV output. The HV cable has to be connected to the load properly and isolated according to proof-voltage.

The shield of the HV cable is always connected to the housing. It can be used as return if the connectors “0V” and “X” are short circuited.

5.3 0V and X

If the short circuit between the connectors “0V” and “X” is removed, as return an additional wire has to be used with a bare area of at least 4 mm². This wire has to connected with “0V”. The potential between the connector “0V“ and the protective ground can be ± 200 V.

Warning! **The user has to ensure that no danger will occur because of the voltage between the connectors ”0V“ and ”X“!**

If the potential between the return conductor and the protective ground will be larger than |200| V then the connectors will be short circuited via an electronically protection circuit to avoid damages of the power supply.

5.4 USB connection

See section 7.1 Description of the RS-232- / USB

5.5 IL connection

See section 4.4 Interlock.

5.6 CAN connection

See section 7.2 Description of the CAN interface.

5.7 IEEE 488 connection

See section 7.3 Description of the IEEE-488 Interface (GPIB).

5.8 Ethernet connection

See section 7.4 Description of the Ethernet interface.

5.9 AIO connection

See section 7.5 Description of the Analogue I/O interface (AIO).

5.10 SPS connection

See section 7.6 Description of the SPS interface.

6 Front panel operation (optional)

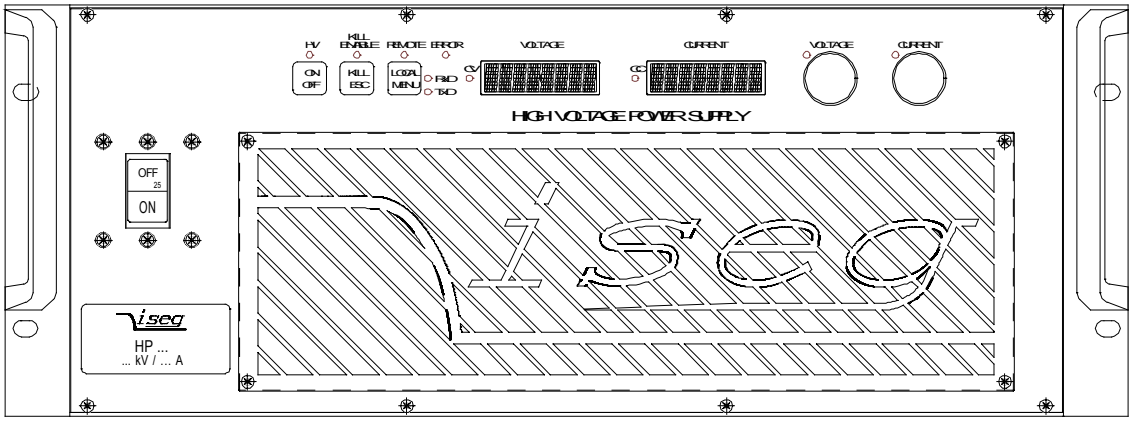

Figure 6.1: Front panel with rotary encoder and displays (LCD)

After closing the mains switch the device is booting and the integrated hardware is initialised. The device is now working in “LOCAL” mode.

In “LOCAL” mode, the set values for voltage and current can be specified with the rotary encoders VOLTAGE for V_{SET} and CURRENT for I_{SET}.

Generation of high voltage starts by pushing the ON/OFF button. While generating high voltage, the green LED “HV” is illuminated.

Warning! **The output voltage will ramp with the specified ramp speeds (voltage, current ramp) to the selected set voltage. Factory setting for the voltage ramp speed is 0.2 • V_{NOM} per second and 100 • I_{NOM} per second for the current ramp speed.**

By pressing ON/OFF again, the high voltage generation is turned off, the green LED “HV” turns off. The high voltage ramps down with the specified voltage ramp speed.

6.1 Displays

The device has two eight digit displays for voltage and current as well as for Menu control.

In HV-OFF state, the set values are shown on the display and can be changed with the rotary encoders VOLTAGE and CURRENT. These set values are stored in processor’s EEPROM and are reloaded at the next start-up.

While displaying the set values for voltage and current, a small ’s’ is flashing at the left side of the display:

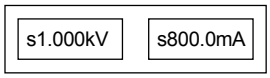

Figure 6.2: Set values on display

In “HV-ON“ state the measured values of voltage and current are displayed:

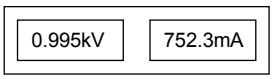

Figure 6.3: Measured values on display

By pressing the rotary encoder VOLTAGE or CURRENT in HV-ON state, the corresponding set value is displayed for a short time to allow exact adjustment.

If the set values are not changed, the device will show again the measured values after four seconds. By pressing the corresponding rotary encoder again, this delay can be shortened.

When high voltage is turned off, the displays show the measured values while ramping down. Four seconds after the measured voltage falls below 60 V, the device displays the set values again.

6.2 Menu

In HV-OFF mode the device menu is accessed by pressing the button “LOCAL/MENU”.

If no further button is pressed, the menu will be closed after 30 seconds. The menu can also be closed without changing any value by pressing the button KILL/ESC.

The rotary encoder VOLTAGE is used to scroll through the menu. Pressing the rotary encoder VOLTAGE selects the displayed menu item. Settings can be changed turning the active rotary encoder (shown by yellow LED). By pressing the active rotary encoder the changes are stored and the main menu is displayed again**.**

Table 6.1: Description of the individual menu items

Display		Description
F01 Set	Limit V	Adjust Software-voltage limit V_{OUTmax} with rotary encoder VOLTAGE. V_{SET} will be limited to this value.
F02 Set	Limit I	Adjust Software-current limit I_{OUTmax} with rotary encoder CURRENT. I_{SET} will be limited to this value.
F03 Set	Ramp V	Adjust voltage ramp speed with rotary encoder VOLTAGE (min. ramp speed … max. ramp speed kV/s).
F04 Set	Ramp I	Adjust current ramp speed with rotary encoder CURRENT (min. ramp speed … max. ramp speed A/s).
F05 Auto	Start	Generate HV with Power-On automatically, not available.
F06 Auto	AIF	Control with analogue I/O automatically, not available.
F07 Set	Interfce	Select external Interface with rotary encoder VOLTAGE: “CAN” control via CAN Interface “RS-232” control via RS-232 Interface ”USB” control via USB Interface “IEEE 488” control via IEEE Interface ”Ethernet” control via Ethernet Interface “AIF” control via Analogue I/O
F08 Set	Instruct	Select instruction type for RS-232/USB/IEEE-488/Ethernet with rotary encoder VOLTAGE: ”EDCP” SCPI command set with EDCP (recommended) “ET” ET command set “SCPI” old SCPI command set
F09 Addr	IEEE	Select IEEE address with rotary encoder VOLTAGE: 01 to 30
F10 Addr	CAN	Select CAN address with rotary encoder VOLTAGE: 00 to 63
F11 Set	Echo	Select Echo state with rotary encoder VOLTAGE: “on” ⇒ “off” ⇒ “on”
F12 Set ARC Cont		Set ARC Management on/off with rotary encoder VOLTAGE (Section 4.3)
F13 Set ARC Num		Set Number of allowed ARCs (Section 4.3)
F14 Set ARC Time		Set Time window for allowed ARCs (Section 4.3)
F15 Set ARC Wait		Set Blanking time, while the power inverter control pulses are disabled (Section 4.3)
F16 Set ARC Ramp		Set Voltage Ramp Speed after ARC with rotary encoder VOLTAGE (Section 4.3)
F17 Set Password		Lock Menu access with four-digit Password. “0000” disables the Password function, every other combination enables the password function. Each digit must be entered separately with the rotary encoder VOLTAGE. By pressing the rotary encoder VOLTAGE, the next digit is selected for input.
F18 Show Power		Show measured power instead of measured current “off” ⇒ “on”.
F19 Quit Menu		Leave Menu by pressing rotary encoder VOLTAGE.

7 Interface control

Device without front panel operation

The device activates all installed interfaces at start up. After receiving a valid command over one interface (e. g. USB), the device goes to the state “REMOTE” and deactivates all other interfaces. With the SCPI command :CONFIGURE:INTERFACE LOCAL the devices switches back to state “LOCAL”, whereby all interfaces were activated again.

Device with front panel operation (optional)

For remote control, the corresponding interface (USB, CAN, RS-232, USB, IEEE-488, Ethernet, AIO) must be specified first via the menu item “F07 Set Interfce”. The device switches to “REMOTE” mode when receiving the first command from the selected interface. The yellow LED “REMOTE” is illuminated.

By pressing the “LOCAL/MENU” button the remote control is suspended. The device can now be controlled from the front panel. When receiving new commands via Interface, the device switches back to “REMOTE” mode.

If “HV-ON” is activated while the device is controlled via a remote interface, high voltage can be turned off by pressing the “ON/OFF” button. In this case the device switches to “LOCAL” mode.

Warning! **If Local control is disabled (Local Lockout, see section 8.1), the device can only be turned off via mains switch!**

7.1 Description of the RS-232- / USB interface

Warning! **Turn off the device with mains switch before connecting/disconnecting the interface cable.**

Caution! **If the device is equipped with RS-232 and USB Interface, only one of them must be connected to the HPS.**

RS-232

The RS-232 interface is located at a D Sub 9 connector on the back panel.

The electric transfer is performed via RxD and TxD, which are related to floating GND of the Interface. The D-Sub 9 pin assignment is given in Table 7.1.

The cable connection to the computer is 1:1 (no zero modem-cable!). If no 9-pin cable is available, connections must be set up as shown in the table.

For remote control, “RS-232” must be selected in Menu “F07 Set Interfce“. The device switches to the “REMOTE” state when receiving the first command via interface.

Table 7.1: Electrical wiring of the RS232 Interface

Signal	HV-PS		PC	Connection	Signal
RS-232	D-SUB-9	Internal	D-SUB-9	RS-232	D-SUB-9
RxD	2		2	RxD	2
TxD	3		3	TxD	3
GND	5		5	GND	5
	4	┐	4		4
	6	┤	6		6
	8	┘	8		8

USB

The USB interface is realized with a female USB-B connector on the back panel. Internally, the USB is implemented by a USB-serial converter FTDI FT232R.

This device operates as a virtual serial port in a PC, and can be used with every program that supports a serial port, e. g. a terminal program or LabVIEW.

Programming

The following description applies to both, RS-232 and USB interface.

The (virtual) serial interface is set to 9600 Bit/s, 8 Bit/character, no parity, 1 Stop-Bit.

The data transfer is character oriented, while the synchronization in the direction "Computer to HV PS unit" (Input direction) is established by echoes. The transfer direction "HV-PS to computer" (Output direction) is without echo.

The echo can be disabled permanently via the menu item "F11 Set Echo" or the SCPI command :CONFIGURE:SERIAL:ECHO. Factory setting is "Echo on".

The command transfer uses ASCII codes. Commands are terminated by <CR><LF> ($0D $0A or 13 10). On the input side, no leading zeros are required. The output is in a fixed format without leading zeros.

A minimum time delay of 20 ms between write and read instructions is required.

Windows USB driver installation

The FTDI VCP driver (Virtual COM Port) can be downloaded from:

http://www.iseg-hv.com → Download → Software → USB driver for THQ/EHQ/HPS

The following steps are necessary for installation:

1. Extract the FTDI driver „CDM 2.04.16 WHQL Certified.zip", e. g. to C:\Temp\
2. Connect the HV-device to the computer via USB
3. The "Found new Hardware Wizard" appears.
4. Please choose "No, not this time" in the first dialog and then click Next.

Figure 7.1: Installation USB driver, dialog 1

iseg Spezialelektronik GmbH
Bautzner Landstr. 23
D - 01454 Radeberg/ Rossendorf
Email: sales@iseg-hv.de
http://www.iseg-hv.de
Tel ++ 49 (0)351 / 26 996 - 0
Fax ++ 49 (0)351 / 26 996 - 21

5. Choose “Install from a list or specific location” in the next dialog and then click Next:

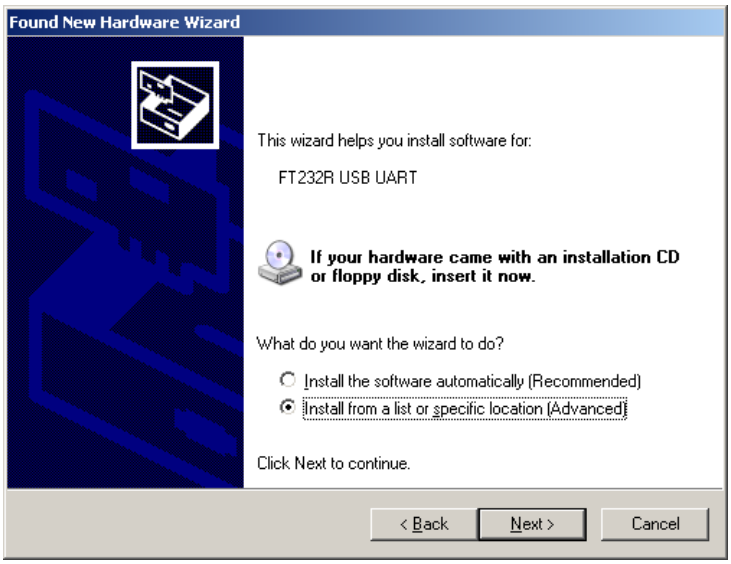

Figure 7.2: Installation USB driver, dialog 2

6. Select the directory where the driver has been extracted to and click Next:

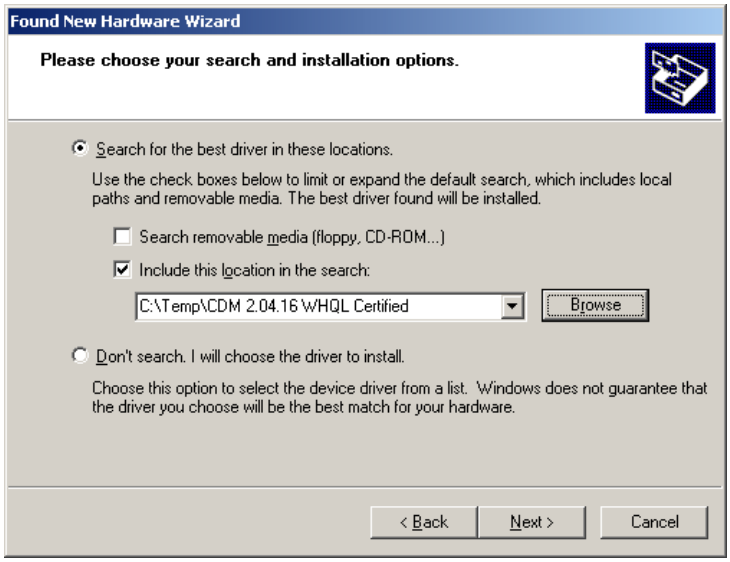

Figure 7.3: Installation USB driver, dialog 3

7. When completed the final dialog displayed:

Figure 7.4: Installation USB driver, final dialog

It may be necessary to repeat the steps 3 to 6 before the device can be used (the first time, a bus driver is installed, the second time, the virtual COM port driver is installed).

RS-232/USB Interface Test in Windows

Determine the serial USB interface with the Device Manager

Start the Device Manager by:

Start → Settings → Control Panel → System → Device Manager

All devices with a USB interface have a USB Serial Port assigned in section Ports (COM & LPT), in this case COM3:

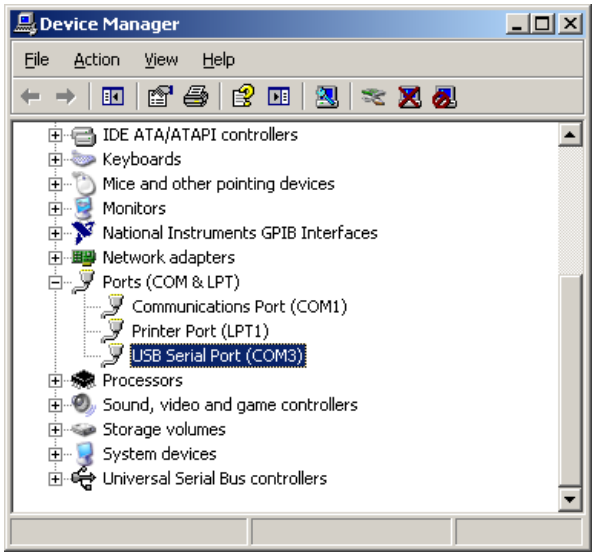

Figure 7.5: Device manager

Test with HyperTerminal

“RS-232” must be selected in Menu “F07 Set Interfce“. The device switches to the “REMOTE” state when receiving the first command via interface.

HyperTerminal is included in Windows 2000 / XP and can be started with:

Start → Programs → Accessories → Communications → HyperTerminal

Create a new connection with „File → New Connection“, name it e. g. “HPS” and click OK.

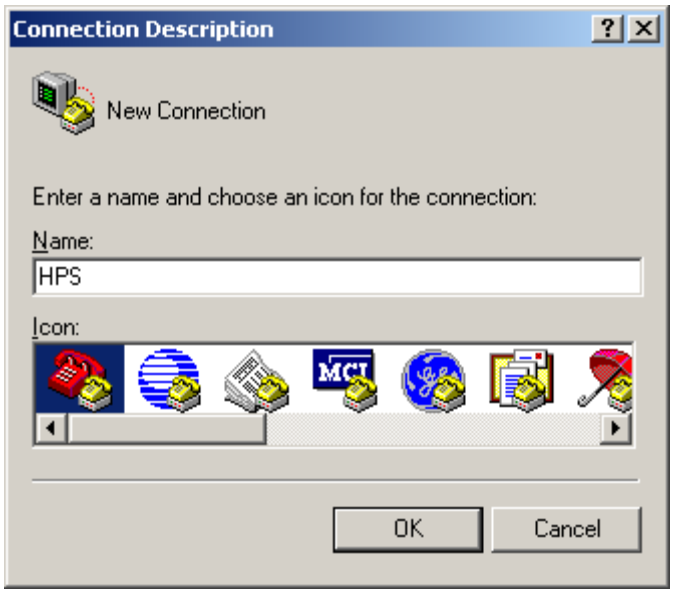

Figure 7.6: HyperTerminal, New Connection

The following dialog appears. Choose your serial port and click OK:

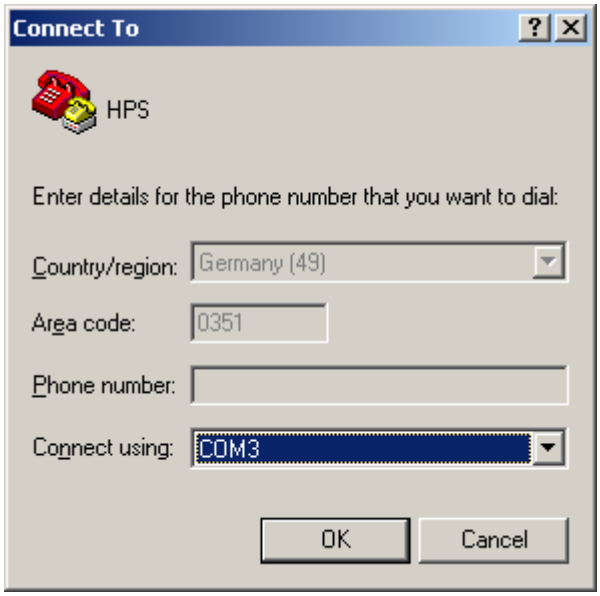

Figure 7.7: Serial port

Please enter the interface parameters in the following dialog:

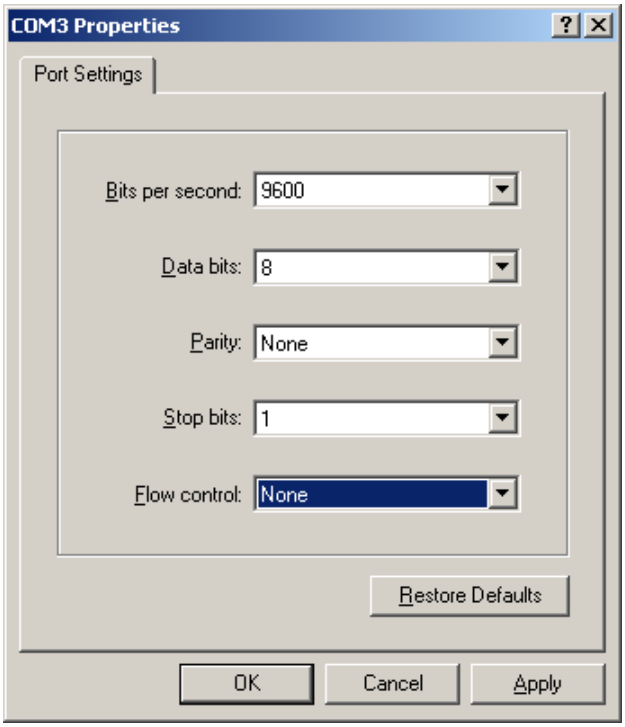

Figure 7.8: Interface parameters

After clicking OK, the interface setup is finished.

As a last step, in:

File → Properties → Settings → ASCII Setup

the setting “Send line ends with line feeds” has to be checked (see following picture).

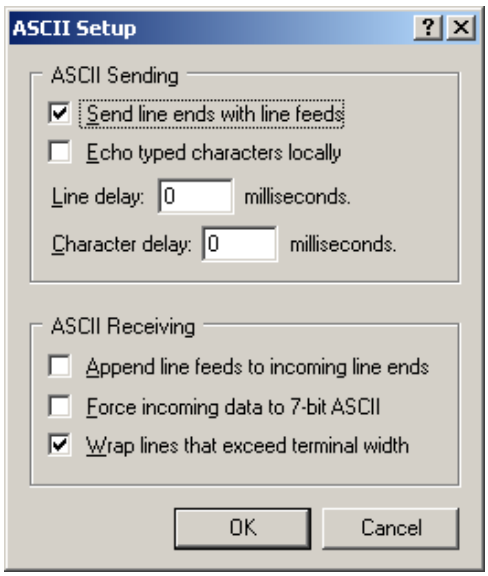

Figure 7.9: ASCII configuration

You can now test the communication with the device:

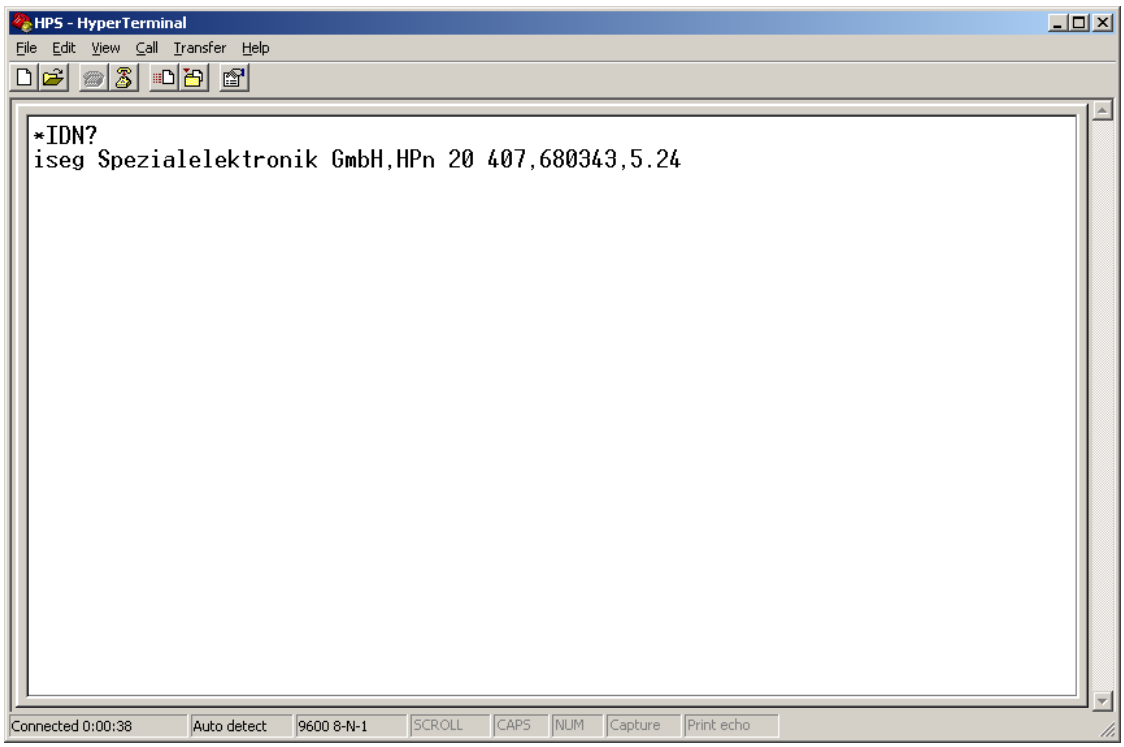

Figure 7.10: Communication with the device

7.2 Description of the CAN interface

Warning! Turn off the device with mains switch before connecting/disconnecting the interface cable.

The connector (SUB D 9) for the CAN interface is located at the back panel of the module and has the following pinout:

Table 7.2: Pinout CAN connector

PIN	Signal
2	CAN_L (CAN Low)
3	CAN_GND
5	CAN_Shield
7	CAN_H (CAN High)

The operating and the command set is equivalent to the EDCP protocol, which is described in the manuals

CAN-Interface

Multi-Channel High Voltage Power Supply Module

EHS xxx and EDS xxx.

To control the device, the programs “IsegCANHVControl” or “iseg OPC Server” can be used.

7.3 Description of the IEEE-488 Interface (GPIB)

Warning! **Turn off the device with mains switch before connecting/disconnecting the interface cable.**

IEEE-488 interface

The IEEE-488 bus interface was implemented with a NEC 7210 compatible IEEE controller. The following interface functions according to IEC 625 are available:

SH1	Source Handshake:	all functions (no polling)
AH1	Acceptor Handshake:	all functions (no polling)
T6	Talker:	Standard equipment
L4	Listener:	Standard equipment

To connect the device to the IEEE bus, a Micro-D25 male connector is located on the back panel. An adapter cable with a 24 pin connector following IEEE-488.2 standard is available as an option.

At devices with a Front panel, “IEEE” must be selected at menu “F09 Set Interfce“ for remote control. At devices without a Front panel, the interface is active after start up.

The IEEE address (1…30) can be specified in the menu “F11 Addr IEEE“. The factory setting for the IEEE address is 17. The IEEE address can also be changed with the SCPI command :CONFIGURE:GPIB:ADDRESS. When receiving control commands over IEEE, the device switches to “REMOTE” state.

Programming

The command transfer uses ASCII codes. Commands are terminated by <CR><LF> ($0D $0A or 13 10). Alternatively, the control line EOI (End or Identify) can be set together with the command’s last character. On input side, no leading zeros are required. The output is in a fixed format without leading zeros.

A minimum time delay of 5 ms between two IEEE commands is needed.

7.4 Description of the Ethernet interface

Warning! **Turn off the device with mains switch before connecting/disconnecting the interface cable.**

The 100 MBit/s Full duplex Ethernet Interface is connected via a RJ-45 socket at the back panel of the device.

The device can be connected to a switch via a patch cable. If it shall be connected to a PC directly, a crossover cable has to be used. The configuration of the Ethernet interface is done with a web browser or the tools of Lantronix company:

http://www.lantronix.com/support/downloads/?p=XPORT.

Please change only the settings on the network page!

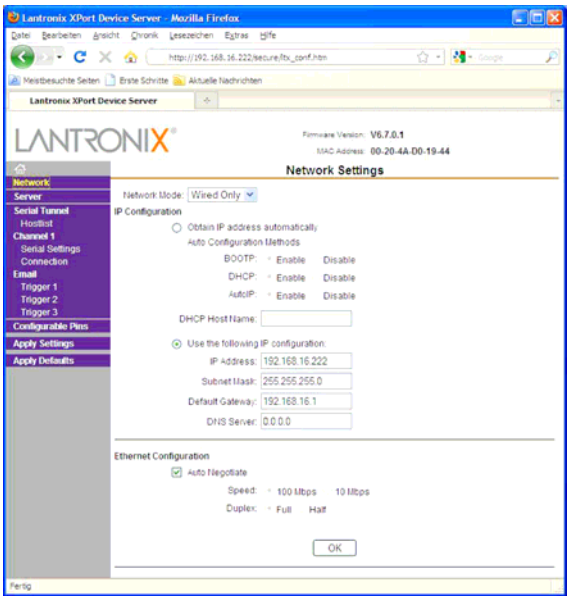

Figure 7.11: Ethernet configuration

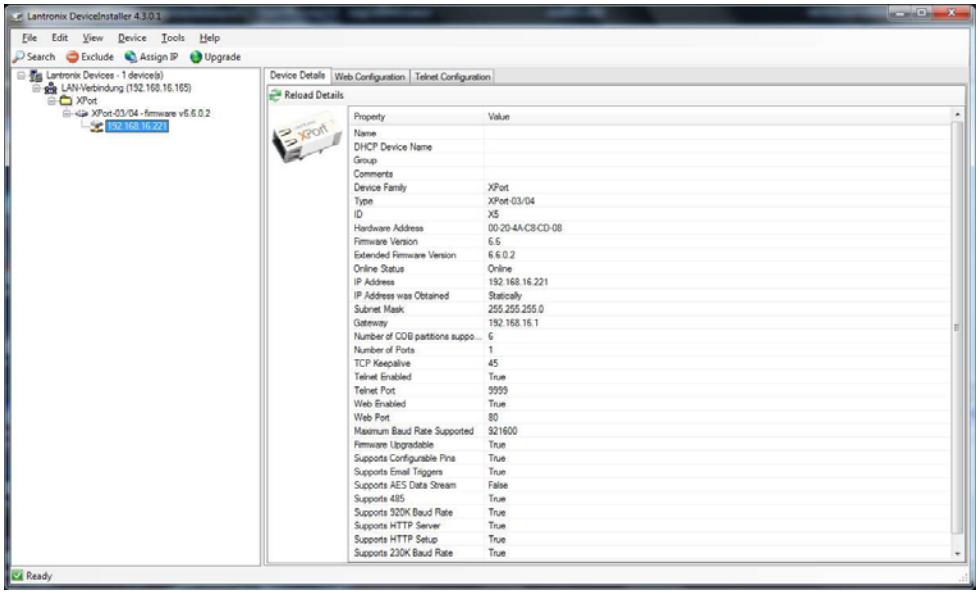

Figure 7.12: Lantronix configuration program

Factory Ethernet settings are shown in the following table:

Table 7.3: Factory Ethernet Settings

IP-address	192.168.16.225
Net mask	255.255.255.0
Default Gateway	192.168.16.1
Command port	10001 (fixed)

The connection can be tested with the ping command (Start → programs → accessories → command).

C:\>ping 192.168.16.225
Ping will done for 192.168.16.225 with 32 bytes data:
Answer from 192.168.16.225: bytes=32 time=4ms TTL=128
Answer from 192.168.16.225: bytes=32 time=4ms TTL=128
Answer from 192.168.16.225: bytes=32 time=4ms TTL=128
Answer from 192.168.16.225: bytes=32 time=4ms TTL=128
Ping statistic for 192.168.16.225 :
Package: sent = 4, received = 4, lost = 0
Time in millisecond:
minimum = 1ms, maximum = 4ms, average = 1ms

During communication, the HV unit act as a server, the control PC acts as a client. The following table shows the principle sequence of communication between PC and HV unit.

Table 7.4: Principle sequence of communication between PC and HV unit

Step	Function call	Computer → HV unit	HV unit → Computer
1	connect()	SYN	
2			SYN, ACK
3		ACK	
4	send()	“*IDN?\r\n”	
5	recv()		“iseg Spezialelektronik GmbH[…]\r\n”
6	closesocket()	FIN, ACK	
7			FIN, ACK
8		ACK	

The first three packages establish a TCP-Connection between Computer and HV unit (three way handshake). Fourth step is the inquiry from PC to HV unit. The command is ASCII coded in data field of the TCP packet. The answer is also ASCII coded send to the PC in step 5. Package No. 6 confirms the receipt of the packet and sends a FIN for termination of connection. Step 7 and 8 are the confirmation of termination of connection from HV unit and PC.

The communication can be monitored with a network sniffer (e. g. Wireshark). Control is done with the instruction sets described later. The preferred command set for Ethernet is “SCPI with EDCP”, as you can build longer Frames which reduces Ethernet Overhead.

Programming

A simple programming example (without error handling) for communication with the HV device over Ethernet is provided. This program was compiled and tested with Microsoft Visual C++ 6.0 on Windows XP.

```
#include <stdio.h>
#include <winsock.h>

int main(int argc, char *argv[])

{
        WSADATA         wsadata;
        SOCKET          sock;
        SOCKADDR_IN     sockaddr_in;
        int             retcode;
        char            cmd[255] = "*IDN?\r\n";
        char            ans[255] = "";
        char            buf[255];
        char            *crlf;

        // init sockets (Berkeley style, UNIX compatible)
        WSAStartup(2, &wsadata);

        // create TCP socket
        sock = socket(AF_INET, SOCK_STREAM, IPPROTO_TCP);

        // bind socket to dynamic local port
        memset(&sockaddr_in, 0, sizeof(sockaddr_in));
        sockaddr_in.sin_family = AF_INET; // UDP, TCP
        sockaddr_in.sin_port = htons(10001); // remote Port
        sockaddr_in.sin_addr.S_un.S_un_b.s_b1 = 192; // IP address
        sockaddr_in.sin_addr.S_un.S_un_b.s_b2 = 168;
        sockaddr_in.sin_addr.S_un.S_un_b.s_b3 = 16;
        sockaddr_in.sin_addr.S_un.S_un_b.s_b4 = 221;

        // connect to server (three way handshake)
        connect(sock, (SOCKADDR *)&sockaddr_in, sizeof(SOCKADDR_IN));

        // send command to server
        send(sock, cmd, strlen(cmd), 0);

        // read answer from server
        do {
                retcode = recv(sock, buf, sizeof(ans), 0);
                If (retcode > 0) {
                        buf[retcode] = 0;
                        strcat(ans, buf);
                }
                crlf = strstr(ans, "\r\n");
        } while ( (retcode > 0) && (crlf == 0) );

        if (crlf > 0) {
                *crlf = 0;
        }

        // close socket (three way handshake) and clean up
        closesocket(sock);
        WSACleanup();
        printf("%s\n", ans);
        getchar();
        return 0;
}
```

7.5 Description of the Analogue I/O interface (AIO)

Warning! **Turn off the device with mains switch before connecting/disconnecting the interface cable.**

All analogue and digital inputs and outputs are electrically isolated from the protective ground. The user is responsible that no danger will occur due to a voltage between the AIO and the protective ground!

All control inputs and outputs are located at the male D Sub 9 connector labelled “AIO” on the back side of the device. The pin assignment of this connectors is shown in Table 7.5.

Table 7.5: Pinout AIO, male D Sub 9 connector

AIO, male D Sub 9 connector			
Pin 1	GND		Return of pins 2-9
Pin 2	V_{MON_I}	(0 .. 5 V)	Monitor output current
Pin 3	INHIBIT		Digital input signal
Pin 4	V_{SET_I}	(0 .. 5 V)	Set value output current
Pin 5	ON		Digital input signal
Pin 6	GND		Return of pins 2-9
Pin 7	V_{MON_V}	(0 .. 5 V)	Monitor output voltage
Pin 8	V_{SET_V}	(0 .. 5 V)	Set value output voltage
Pin 9	V_{REF}	5,1 V	

Figure 7.13 shows the electrical wiring of the analogue and digital in- and outputs.

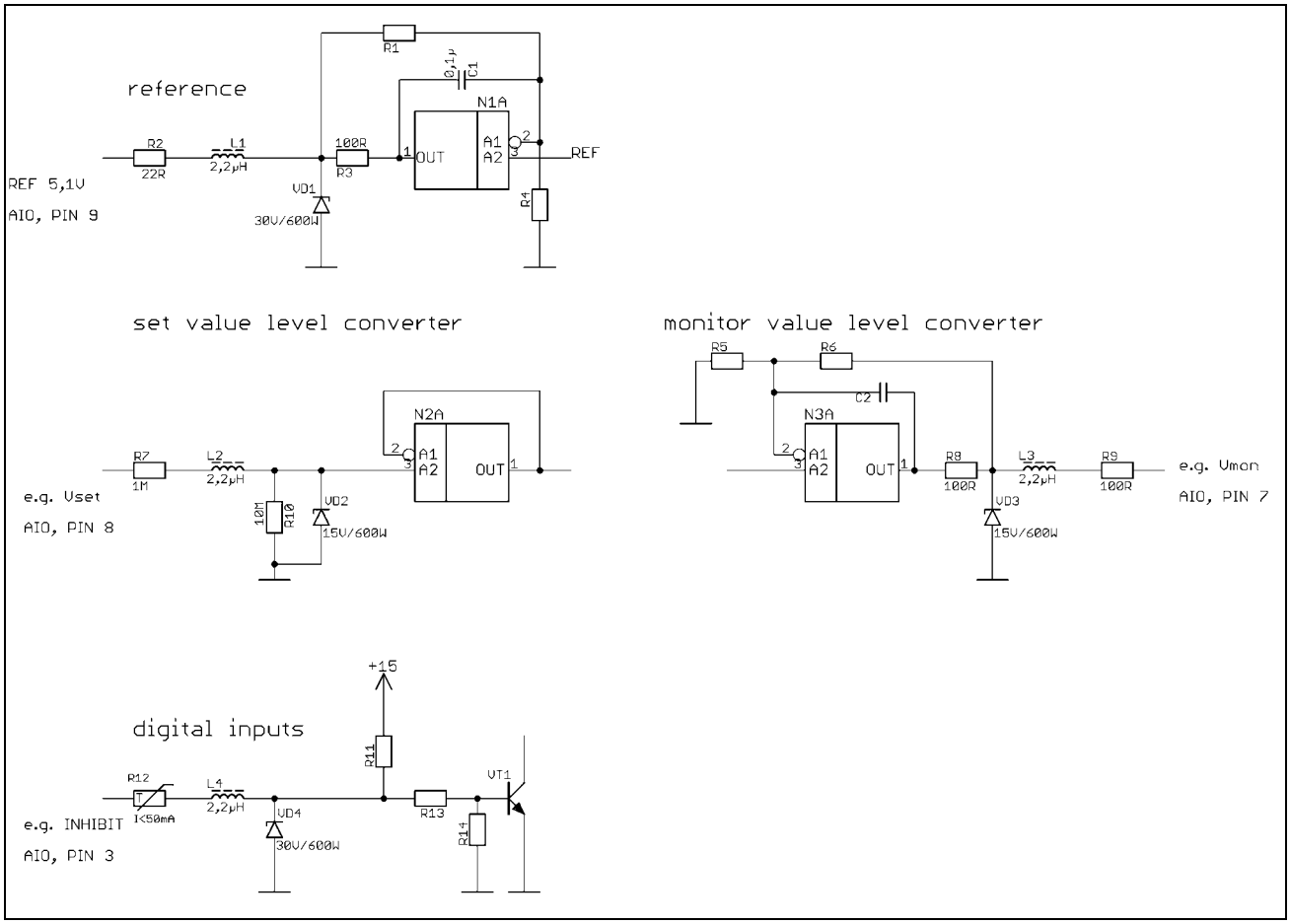

Figure 7.13: Electrical wiring of the output signals

Warning! **All analogue and digital signals are floating with respect to the HV GND and the protective ground. The user has to ensure that no danger can occur caused by the potential between the connector "AIO" and the protective ground.**

The potential between the connector „AIO“ and the protective ground is limited to |85| V to prevent damages of the unit.

The high voltage is turned on/off with the analogue interface control signals "ON" and/or "INHIBIT".

Set values

A voltage between 0 - 5 V at Pin 8 (reference potential Pin 6) of the connector "AIO" controls the output voltage between 0 – V_{NOM}. Similarly, at Pin 4 the output current is controlled between 0 -I_{NOM}.

Monitor voltages

Monitor voltages (0 - 5 V) proportional to the output voltage and output current are available at Pin 7 and Pin 2 of the connector "AIO", respectively (reference potential Pin 6).

INHIBIT

By applying a low level signal at pin 3 of the connector "AIO", the high voltage generation will be shut off immediately and will be blocked. High voltage generation is activated with a high level signal or open contact at pin 3 of the connector "AIO".

Warning! **Do not use the Inhibit function as a safety loop.**

ON

By applying a low level signal at Pin 5 of the connector "AIO" (reference potential Pin 6) , the high voltage ramps down with the specified voltage ramp speed.

After a rising edge of a signal at pin 5 of the connector "AIO" (reference potential Pin 6) the output voltage increases with the set ramp speed or the given output current to its set value (V_{SET_V} Pin 8 of the connector "AIO") or until the set value of the output current is reached (V_{SET_I} Pin 4 of the connector "AIO").

7.6 Description of the SPS interface

Warning! **Turn off the device with mains switch before connecting/disconnecting the interface cable.**

All analogue and digital inputs and outputs are electrically isolated from the protective ground. The user is responsible that no danger will occur due to a voltage between the connectors "AIO", "DIO" and the protective ground!

All analogue control inputs and outputs are located a the male D Sub 9 connector labelled "AIO" on the back side of the device. The digital control signals are located at the female D Sub 9 connector labelled "DIO". The pin assignment of these connectors is described in the following tables.

Table 7.6: Pinout AIO, male D Sub 9 connector

AIO, male D Sub 9 connector, analogue signals			
Pin 1	GND		Return of pins 2-9
Pin 2	V_{MON_I}	(0 .. 10 V)	Monitor output current
Pin 3	V_{MON_I1}	(0 .. 10 V)	Monitor current HV output 1 (option 2HC)
Pin 4	V_{SET_I}	(0 .. 10 V)	Set value output current
Pin 5	V_{MON_I2}	(0 .. 10 V)	Monitor current HV output 2 (option 2HC)
Pin 6	GND		Return of Pins 2-9
Pin 7	V_{MON_V}	(0 .. 10 V)	Monitor output voltage
Pin 8	V_{SET_V}	(0 .. 10 V)	Set value output voltage
Pin 9	V_{REF}	10,2 V	Reference voltage

Table 7.7: Pinout DIO, female D SUB 9 connector

DIO, female D Sub 9 connector, digital signals		
Pin 1	GND	Return of Pins 2-9
Pin 2	Nicht belegt	
Pin 3	INHIBIT	Input
Pin 4	Error	Output
Pin 5	HV	Output
Pin 6	GND	Return of Pins 2-9
Pin 7	Power On	Output
Pin 8	ARC Error	Output
Pin 9	ARC	Output

The acceptable voltage range for the Input Pin 2 is 8 V to 30 V, short circuit current is limited to 100 mA. Typical current consumption of the input (INHIBIT) is 8 mA.

Figure 7.14 shows the electrical wiring of the analogue and digital in- and outputs.

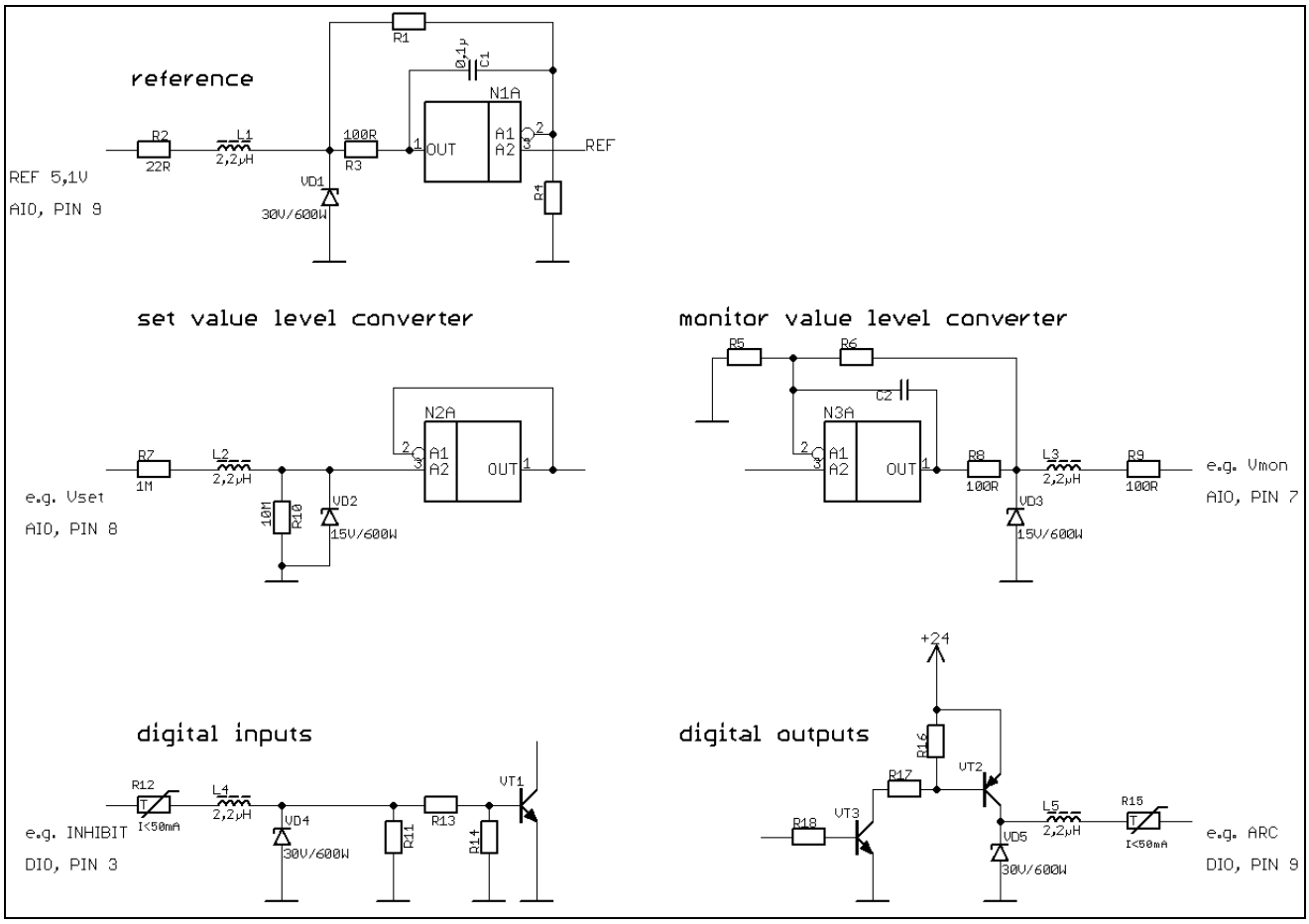

Figure 7.14: Electrical wiring of the output signals

Warning! **All analogue and digital signals are floating with respect to the HV GND and the protective ground. The user has to ensure that no danger can occur caused by the potential between the connectors "AIO", "DIO" and the protective ground.**

The potential between the connectors „AIO", "DIO" and the protective ground is limited to |85| V to prevent damages of the unit.

The high voltage is turned on/off with the SPS interface control signal "INHIBIT".

Set values

A voltage between 0 - 10 V at Pin 8 (reference potential Pin 6) of the connector "AIO" controls the output voltage between 0 – V_{NOM}. Similarly, at Pin 4 the output current is controlled between 0 -I_{NOM}.

Monitor voltages

Pin 7 of the connector "AIO" provides a voltage (0 - 10 V) proportional to the output voltage. At Pin 2 there is a voltage (0 - 10 V) available, which is proportional to the output current, (reference potential Pin 6).

INHIBIT

By applying a low level signal at pin 3 of the connector "DIO", the high voltage generation will be shut off immediately and will be blocked.

After a rising edge of a signal at pin 3 of the connector "DIO" (reference potential Pin 6) the output voltage increases with the set ramp speed or or the given output current to its set value (V_{SET_V} Pin 8 of the connector "AIO") or until the set value of the output current is reached (V_{SET_I} Pin 4 of the connector "AIO").

Warning! **Do not use the Inhibit function as a safety loop.**

Error

Pin 4 of “DIO” switches to high in case of an error or open safety loop. An Error is present if one of the following events occurred:

1. Threshold (min/max) of at least one out of three-phase mains exceeded
2. Threshold of an auxiliary voltage exceeded
3. Temperature threshold exceeded
4. A predefined number of ARCs is detected within a predefined time (section 4.3)
5. Maximum value of output voltage exceeded
6. Open safety loop
7. Reset of the microprocessor

HV

Pin 5 of connector “DIO” will be high if the HV-generation is started.

ARC

Pin 7 of “DIO” will be high for 10 ms ± 10% in case of an detected ARC.

ARC Error

Pin 8 of “DIO” will be high if a predefined number of ARCs are detected in a specific time (see section 4.3)

Power On

If the unit is switched on and auxiliary voltages are available, PIN 9 of “DIO” will be high.

8 SCPI command set with EDCP

8.1 Introduction

To use this command set, select “EDCP” in the menu or use the *INSTR command. (EDCP = Enhanced Device Communication Protocol). This command set is based on the iseg EDCP CAN Protocol with Status and Event handling. The Status and Event Status Fields are explained below the SCPI table.

By entering values (e.g. set voltage) it is not necessary to add the corresponding units. The response of the device always includes the unit.

Module is the description of the complete high voltage power supply. It may consist of several high voltage-*channels*, devices of the series HPS/LPS only have one high voltage *channel.*

Table 8.1: SCPI command set with EDCP

Common Commands		
*IDN?		Query Module Identification
*CLS		Clear Module (Event-)Status
*RST		Reset device to save values (Turn HV off with ramp, Vset= 0, Iset= Inominal)
*LLO		Local Lockout (disable front panel buttons)
*GTL		Goto Local (enable front panel buttons)
*INSTR?		Query instruction set
*INSTR,EDCP		Switch to EDCP SCPI command set
SCPI Commands		
:VOLTage		
	<Voltage>[V]	Set Channel Voltage
	:LIMit <Voltage>[V]	Set Voltage Limit
	:BOUnds <Voltage>[V]	Set Channel Voltage Bounds
	{ ON | OFF }	Set Channel On / Off (with configured ramp speed)
	EMCY OFF	Shut Channel Emergency Off (without ramp) [1]
	EMCY CLR	Leave state emergency off [2]
:CURRent		
	<Current>[A]	Set Channel Current
	:LIMit <Current>[A]	Set Current Limit
	:BOUnds <Current>[A]	Set Channel Current Bounds
:EVent		
	CLEAR	Clear Channel Event Status
	:MASK <Word>	Set Channel Event Mask
:MEASure		
	:VOLTage?	Query Measured Channel Voltage (V)
	:CURRent?	Query Measured Channel Current (A)

[1, 2] If the high voltage is shut down with :VOLT EMCY OFF, the channel is hold in state Emergency Off. To turn on the High Voltage again, the state Emergency Off must be reset using :VOLT EMCY CLR. Furthermore, the Channel EventStatus Bit EEMCY must be cleared e. g. with *CLS.

Table 8.2: Continuation: SCPI command set with EDCP

:CONFigure			Set/Get module configuration
	:RAMP		
		:VOLTage <RampSpeed>[V/s]	Set Module Voltage Ramp Speed
		:CURRent <RampSpeed>[A/s]	Set Module Current Ramp Speed
	:Event		
		CLEAR	Clear Module Event Status
		:MASK	Set Module-Event-Mask
	:KILL?		Query Module Kill Status
	:KILL { 0 | 1 }		Set Kill Disable (0) or Kill Enable (1)
	:AVERage?		Query number of steps of averaging of the measured values
	:AVERage { 1 | 16 | 64 | 256 }		Set number of steps of averaging of the measured values. this setting will be stored in the EEPROM
	:ETHernet		
		:ADDRess?	Query Ethernet IP Address
		:ADDRess <xxx.xxx.xxx.xxx>	Set Ethernet IP Address
		:NETmask?	Query Ethernet IP Netmask
		:NETmask <xxx.xxx.xxx.xxx>	Set Ethernet IP Netmask
		:GATEway?	Query Ethernet IP Default Gateway
		:GATEway <xxx.xxx.xxx.xxx>	Set Ethernet IP Default Gateway
		:MAC?	Query Ethernet MAC Address
	:SERIAL		RS-232/USB Configuratio
		:BAUDrate?	Query Serial Baudrate
		:ECHO?	Query Serial Echo
		:ECHO { 0 | 1 }	Set Serial Echo Off (0) or Echo On (1)
	:GPIB		
		:ADDRess?	Query IEEE-488/GPIB Address
		:ADDRess { 1…30 }	Set new IEEE-488/GPIB Address
	:CAN		
		:ADDRess?	Query CAN Address
		:ADDRess { 0…63 }	Set new CAN Address
		:BITrate?	Query CAN Bitrate
	:INTERface LOCAL		Switch from Interface to local operation
	:INTERface?		Query selected interface (only for devices with front panel)
		:LIST?	Query all installed interfaces
	:ARC		
		:CONTrol?	Query ARC management status
		:CONTrol { 0 | 1 }	Disable (0) or enable (1) ARC management
		:NUMber?	Query number of ARCs before turn off
		:NUMber { $ArcNum_{min}$…$ArcNum_{max}$ }	Set number of ARCs before turn off
		:TIME?	Query ARC time before turn off
		:TIME { $ArcTime_{min}$…$ArcTime_{max}$ }	Set ARC time before turn off
		:WAIT?	Query wait time after ARC
		:WAIT { $ArcWait_{min}$…$ArcWait_{max}$ }	Set wait time after ARC
		:RAMP?	Query voltage ramp speed after ARC
		:RAMP { $ArcRamp_{min}$…$ArcRamp_{max}$ }	Set voltage ramp speed after ARC

Table 8.3: Continuation: SCPI command set with EDCP

:READ				
	:VOLTage?			Query Set Voltage (V)
		:LIMit?		Query Voltage Limit (V)
		:NOMinal?		Query Nominal Voltage (V)
		:BOUnds?		Query Voltage Bounds (V)
	:CURRent?			Query Set Current (A)
		:LIMit?		Query Current Limit (A))
		:NOMinal?		Query Nominal Current (A)
		:BOUnds?		Query Current Bounds (A)
	:RAMP			
		:VOLTage?		Query Voltage Ramp Speed (V/s)
		:CURRent?		Query Current Ramp Speed (A/s)
	:MODule			
		:STATus?		Query Module Status Word (section 8.5)
		:EVent		
			:STATus?	Query Module Event Status (section 8.6)
			:MASK?	Query Module Event Mask
		:SUPply?		Query Module Supply State (1 = good, 0 = not good)
		:TEMPerature?		Query measured Module Temperature (°C)
	:CHANnel			
		:STATus?		Query Channel Status Word (section 8.3)
		:EVent		
			:STATus?	Query Channel Event Status Word (section 8.4)
			:MASK?	Query Channel Event Status Mask

8.2 Output formats for voltage and current:

Table 8.4: Output format for voltage

Vnominal	Output format for voltages
100 V ≤ V_{nom} < 1 kV	123.456V
1 kV ≤ V_{nom} < 10 kV	1.23456E3V
10 kV ≤ V_{nom} < 100 kV	12.3456E3V

Table 8.5: Output format for current

Inominal	Output format for currents
1 mA ≤ I_{nom} < 10 mA	1.23456E-3A
10 mA ≤ I_{nom} < 100 mA	12.3456E-3A
100 mA ≤ I_{nom} < 1 A	123.456E-3A
1 A ≤ I_{nom} < 10 A	1.23456A
10 A ≤ I_{nom} < 100 A	12.3456A

Examples:

Read Module-Identification:

*IDN?
iseg Spezialelektronik GmbH,HPp 40 207,680001,5.24

Set Voltage to 1000.501 V:

:VOLT 1000.501

Set current to 1.58 mA:

:CURR 0.00158

Set voltage ramp speed 300 Volt per second:

:CONF:RAMP:VOLT 300

Advanced Examples:

Set and read back Voltage and Current:

:VOLT 2000.5; :READ:VOLT?; :CURR 0.2; :READ:CURR?
2.00050E3V;200.000E-3A

Read actual measured Voltage and Current:

:MEAS:VOLT?; CURR?
2.00028E3V;19.9973E-3A

ARC-Management

A complete description of the ARC management is available in section 4.3. The ARC management settings are stored in the microprocessor's EEPROM permanently.

With the following settings, a Full ARC Recovery of 200 ms is possible:

:CONF:ARC:CONT 1	Activate *ARC management*
:CONF:ARC:NUM 10	Ten ARCs allowed ...
:CONF:ARC:TIME 1	*... during one second*
:CONF:ARC:WAIT 100E-3	*Wait time between ARCs 100 ms*
:CONF:ARC:RAMP 1E5	*Voltage ramp speed after ARC 100 kV/s (V_{NOM} = 10kV)*

8.3 Channel status (read access)

:READ:CHANnel:STATus?

Table 8.6: Channel Status Register

Bit15	Bit14	Bit13	Bit12	Bit11	Bit10	Bit9	Bit8
isOVP	isCLIM	isTRIP	isEINH	isVBND	isCBND	isARCERR	Res
Bit7	Bit6	Bit5	Bit4	Bit3	Bit2	Bit1	Bit0
isCV	isCC	isEMCY	isRAMP	isON	isIERR	isARC	Res

The ChannelStatus register describes the *current* status. Depending on the status of the channel the bits will be set or deleted.

Table 8.7: Explanation of individual bits of the cannel status Registers

Bit	Name		Description	
IsOVP	IsOverVoltageProtection		Voltage limit set by V_{max} is exceeded	
	Bit= 1	Voltage Limit is exceeded		Bit= 1
IsCLIM	IsCurrentLimitExceeded		Current limit set by I_{max} is exceeded	
	Bit= 1	Current Limit is exceeded		Bit= 1
IsARCERR	IsArcError		Error in ARC Management (Section 3.3)	
	Bit= 1	ARC Error: Channel is shut down to 0 V without ramp.		Bit= 1
IsEINH	IsExtInhibit		External Inhibit	
	Bit= 1	External Inhibit was scanned		Bit= 1
IsVBND	IsVoltageBoundsExceeded		Voltage out of bounds	
	Bit= 1	|Vmeas - Vset| > Vbounds		Bit= 1
IsCBND	IsCurrentBoundsExceeded		Current out of bounds	
	Bit= 1	|Imeas - Iset| > Ibounds		Bit= 1
IsCV	IsControlledVoltage		Voltage control active (evaluation is guaranteed when no ramp is running)	
	Bit= 1	Channel is in state Voltage Control		Bit= 1
IsCC	IsControlledCurrent		Current control active (evaluation is guaranteed when no ramp is running)	
	Bit= 1	Channel is in state Current Control		Bit= 1
IsEMCY	IsEmergencyOff		Emergency off without ramp	
	Bit= 1			Bit= 1
IsON	IsOn		HV is On	
	Bit= 1	Channel is switched ON		Bit= 1
IsRAMP	IsRamping		Ramp is running	
	Bit= 1	Channel voltage is changing (ramping)		Bit= 1
IsIERR	InputError		Input error	
	Bit= 1	Input Error occured		Bit= 1
IsARC	IsARC		ARC is detected (Section 4.3)	
	Bit= 1	ARC detected		Bit= 1
Res	Reserved			
Bit	Name	Description	Bit	Name
IsOVP	IsOverVoltageProtection		Voltage limit set by V_{max} is exceeded	

8.4 Channel event status (read/write access)

:READ:CHANnel:EVent:STATus?

Table 8.8: Channel event status Register

Bit15	Bit14	Bit13	Bit12	Bit11	Bit10	Bit9	Bit8
EOVP	ECLIM	ETRIP	EEINH	EVBNDs	ECBNDs	EARCERR	res
Bit7	Bit6	Bit5	Bit4	Bit3	Bit2	Bit1	Bit0
ECV	ECC	EEMCY	EEOR	EOn2Off	EIER	EARC	Res

The Channel EventStatus register describes the *captured* status.

An event bit is permanently set if the corresponding status bit is 1 or is changing to 1. In contrast to the status bit an event bit is not automatically reset. A reset can be done by the user by writing an 1 to this event bit. All Events can be cleared by :EVENT:CLEAR.

If one of the EventStatus Bits EOVP, EARCERR, ECLIM, ETRIP, EEINH, EVBNDs, ECBNDs, EEMCY is set, the High Voltage generation cannot be reactivated until the corresponding bit is cleared.

Table 8.9: Explanation of individual bits of the cannel event status registers

Bit	Name	Description
EOVP	EventOverVoltageProtection	Event: Voltage limit has been exceeded
ECLIM	EventCurrentLimit	Event: Current limit has been exceeded
ETRIP	EventTrip	Event: Current set value in “Kill-Enable“ mode exceeded
EEINH	EventExtInhibit	Event: Externes Inhibit
EVBNDs	EventVoltageBounds	Event: Voltage out of bounds
ECBNDs	EventCurrentBounds	Event: Current out of bounds
EARCERR	EventArcError	Event: Error ARC management (section 4.3)
ECV	EventControlledVoltage	Event: Voltage control
ECC	EventControlledCurrent	Event: Current control
EEMCY	EventEmergencyOff	Event: Emergency off
EEOR	EventEndOfRamp	Event: End of ramp
EOn2Off	EventOnToOff	Event: Change from state "On" to "Off" without ramp
EIER	EventInputError	Event: Input error
EARC	EventArc	Event: Detected Arc
Res	Reserved	

8.5 Modul-Status (read access)

:READ:MODule:STATus?

Table 8.10: Module status Register

Bit15	Bit14	Bit13	Bit12	Bit11	Bit10	Bit9	Bit8
isKILena	isTEMPgd	isSPLYgd	isMODgd	isEVNTact	isSFLPgd	isnoRAMP	isnoSERR
Bit7	Bit6	Bit5	Bit4	Bit3	Bit2	Bit1	Bit0
Res	Res	Res	isSrvc	Res	Res	Res	isADJ

The module status register describes the *current* status of the module.

Table 8.11: Explanation of the individual bits of the module status Registers

Bit	Name	Description	Bit=1	Bit=0
IsKILena	IsKillEnable	Module state of kill enable	Module is in state Kill Enable	Module is in state Kill disable
IsTEMPgd	IsTemperatureGood	Module temperature	Module temperature too high, High voltage is turned off	Module temperature OK
IsSPLYgd	IsSupplyGood	Power supply	Power Supply is good	Power Supply is not good
IsMODgd	IsModuleGood	Module status	Module status is good	Module status bad
IsEVNTact	IsEventActive	Masked evants	At least one masked Event is active	No masked Event is active
IsSFLPgd	IsSafetyLoopGood	Safety loop (Interlock)	Safety Loop is closed	Safety Loop is open
IsnoRAMP	IsNoRamp	State of voltage changing (ramping)	All channels stable, no ramp active.	At least one channel is ramping
IsnoSERR	IsNoSumError	Module sum error	No sum error	Sum error active
IsSrvc	IsServiceNeeded	Hardware failure detected	Hardware failure detected: consult manufacturer	No Hardware failure detected
IsADJ	IsFineAdjustment	Mode of the fine adjustment	Adjustment is on	Adjustment is off
Res	Reserved			

8.6 Module event status (read/write access)

:READ:MODule:EVent:STATus?

The Module EventStatus register describes the *captured* status. Depending on the status of the module the bits will be set but not deleted. An event bit can be reset by the user, overwriting this bit with a 1. All Events can be cleared by :CONFIGURE:EVENT:CLEAR.

Table 8.12: Module event status Register

Bit15	Bit14	Bit13	Bit12	Bit11	Bit10	Bit9	Bit8
Res	ETMPngd	ESPLYngd	Res	Res	ESFLPngd	Res	Res
Bit7	Bit6	Bit5	Bit4	Bit3	Bit2	Bit1	Bit0
Res	Res	Res	Res	ESrvc	Res	Res	Res

Table 8.13: Explanation of the individual bits of the module status event Registers

Bit	Name	Description
ETEMPngd	EventTemperatureNotGood	Event: Temperature too high
ESPLYngd	EventSupplyNotGood	Event: at least one of the supplies is not good
ESFLPngd	EventSafetyLoopNotGood	Event: Safety loop is open
ESrvs	EventService	Event: A hardware failure of the HV module has been detected. The HV is switched off without the possibility to switch it on again. Please consult the iseg Spezialelektronik GmbH.

9 Further Command Sets

The device is compatible with further command sets (ET command set, SCPI command set old). More Information about this command sets can be requested from iseg Spezialelektronik GmbH.

These command sets will not be updated, e.g. parameterization of the ARC management.

10 Error

10.1 Error acknowledgement

With the following options an error event can be reset or acknowledged:

- Rising edge of the INHIBIT function (section 7.5 or section 7.6),
- Via the digital interfaces with the command *CLS (section8.1) or
- By pressing the button “Kill Esc” at the front panel (optional) (section 7).

10.2 Error messages on the LC-Displays

Table 10.1: Error messages on the LC-Displays

Error messages during operation	
Display:	Explanation:
SAFETYLOOP	Safety loop (Interlock) is not closed. No high voltage generation possible.
OVERTEMPERATURA	High voltage has been shut down because of over temperature (section 4.2).
ERROR SUPPLY	Either mains voltage or an auxiliary voltage exceed its lower or upper threshold.
EXTERNAL INHIBIT	No high voltage can be generated due to an external inhibit (analogue I/O).
OVP	Maximum output voltage exceeded (section4.2).
ERROR ARC	Error: Predefined number of ARCs exceeded (section 4.3)
EMERGNCY OFF	High voltage has been shut down with Emergency Off
CURRENT TRIP	Set current value was reached with Kill Enable. High voltage has been shut down immediately
ERROR SERVICE	Device must be shipped to the factory for service.
Error message during boot	
Display:	Explanation:
CONTACT SERVICE	Device must be shipped to the factory for service.

10.3 Further Errors

Table 10.2: Further Errors

Unit does not provide output voltage and the fans are not working	⇒	- Check supply voltage and connection
Unit does not provide output voltage but the fans are working	⇒	- Check supply voltage - Check environmental temperature ($T_U \leq 50°C$) - Check control - Check INHIBIT function - Check safety loop
External fuses trip during switch on.	⇒	- Use fuses with slow characteristic (inrush current 20 A)
Unit provides output voltage only for a limited time	⇒	- Check status air filter

If these instructions do not lead to a good result, this unit must be checked by an authorised agent or shipped to the factory.

11 Maintenance

For compliance of the specified accuracy of set and monitor signals, the unit has to be recalibrated once a year.

Repair and maintenance may only be performed by trained and authorized personnel.