Technical documentation
Last changed on: 2022-12-01

APS series

Small High Voltage Print Module for PCB mounting

- 200 V – 1 kV versions available
- patented resonance converter technology
- controlled by analog set voltage
- analog monitor voltage
- low ripple and noise, low EMI
- RoHS compliant

Document history

Version	Date	Major changes
2.4	2022-12-01	Improved description revision (revision and customization), rename document
2.3	2021-04-26	Improved documentation, Item code revision and customization
2.2	2020-07-08	Improved documentation
2.1	2019-06-03	Improved documentation, error correction
2.0	2017-02-28 2018-06-13	Relayouted documentation Improved documentation

Disclaimer / Copyright

The information in this manual is subject to change without notice. We take no responsibility for any mistake in the document. We reserve the right to make changes in the product design without reservation and without notification to the users. We decline all responsibility for damages and injuries caused by an improper use of the device.

Intended Use

The device may only be operated within the limits specified in the data sheet. The permissible ambient conditions (temperature, humidity) must be observed. The device is designed exclusively for the generation of high voltage as specified in the data sheet. Any other use not specified by the manufacturer is not intended. The manufacturer is not liable for any damage resulting from improper use.

Qualification of personnel

A qualified person is someone who is able to assess the work assigned to him, recognize possible dangers and take suitable safety measures on the basis of his technical training, his knowledge and experience as well as his knowledge of the relevant regulations.

General safety instructions

- Observe the valid regulations for accident prevention and environmental protection.
- Observe the safety regulations of the country in which the product is used.
- Observe the technical data and environmental conditions specified in the product documentation.
- You may only put the product into operation after it has been established that the high-voltage device complies with the country-specific regulations, safety regulations and standards of the application.
- The high-voltage power supply unit may only be installed by qualified personnel.

1 General description

The APS High Voltage Power Supply module series is a very small DC/DC power converter which can be mounted and soldered on printed circuit boards (PCB). The output voltage is controllable with an analog control voltage. Therefore a potentiometer or fixed resistor can be used. The patented resonance converter technology and moulded metal box shielding guarantee lowest electromagnetic interference and low ripple and noise of the output voltage.

Customized versions can be produced on request.

2 Technical Data

SPECIFICATIONS	APS 0.5 W	APS 1 W
Polarity	Factory fixed, positive or negative	
Ripple and noise [1]	typ. < 10 mV_{p-p} | max. < 30 mV_{p-p} [f > 10 Hz] < 5 mV_{p-p} [f > 2 kHz]	
Stability [ΔV_{out} vs. ΔV_{in}] [1]	$< 1 \cdot 10^{-3} \cdot V_{nom}$	
Stability - [ΔV_{out} vs. ΔR_{load}] [1]	$< 2 \cdot 10^{-3} \cdot V_{nom}$	
Temperatur coefficient	< 50 ppm/K [3]	
Supply voltage [2] V_{in}	4.5 – 5.5 V	11.5 – 15.5 V
Supply current I_{in} at V_{out} = 0 at V_{out} = V_{nom} / no load at V_{out} = V_{nom} / with load	 < 5 mA < 25mA < 180 mA	 < 5 mA < 18mA < 150 mA
Set / Monitor voltage	0 - 2.5 V	0 – 5 V
Adjustment accuracy	± 1 % [3]	
Signal /ON	/ON: = 0 (LOW or open) ➜ V_{OUT} according setting 5.5V ≥ $V_{/ON}$ >2.5V(HIGH) ➜ V_{OUT} =0 !	
Reference voltage V_{ref} (internal)	2.5 V ±1%	5 V ±1%
Control V_{set} - version 1	with R_{set} connected between V_{set} and GND: $R_{set} = V_{out} \cdot 10k\Omega / (V_{nom} - V_{out})$	
Control V_{set} - version 2	with V_{set} (Ri<<10 kΩ): $0 \le V_{set} \le 2.5V$ ➜ $0 \le V_{out} \le V_{nom}$ ±1.0% [3] **Attention!** Output voltage is internally **not limited!** At V_{set} > 2.5 V ➜ V_{out} > V_{nom} is possible! Do not use V_{set} > 2.5 V !	with V_{set} (Ri<<10 kΩ): $0 \le V_{set} \le 5V$ ➜ $0 \le V_{out} \le V_{nom}$ ±1.0% [3] **Attention!** Output voltage is internally **not limited!** At V_{set} > 5 V ➜ V_{out} > V_{nom} is possible! Do not use V_{set} > 5 V !
Protection	Overload and short circuit protected	
HV connector	Pin	
Case	Metal box steel, moulded	
Dimensions – L/W/H	40 / 16 / 11mm³	
Operating temperature	0 – 40 °C	
Storage temperature	-20 – 60 °C	

Notes:
[1] Specifications for stability, ripple and noise are guaranteed in the range 2% • $V_{nom} < V_{out} \le V_{nom}$
[2] Blocking circuit is recommended for ripple rejection to input line with 22 µF near pin +VIN
[3] Temperature coefficient and accuracy are guaranteed in the temperature range 0 – 40 °C

Table 1: Technical data: Specifications

CONFIGURATIONS						
Type	**V_{nom}**	**I_{nom}** [1]	**Ripple / Noise typ. (mV_{p-p})**	**Ripple / Noise max. (mV_{p-p})**	**P_{nom}**	**Item code**
APx 02 255 5	200 V	2.5 mA	< 10	< 30	0.5 W	AP002255x05rk
APx 04 125 5	400 V	1.2 mA	< 10	< 30	0.5 W	AP004125x05rk
APx 06 804 5	600 V	0.8 mA	< 10	< 30	0.5 W	AP006804x05rk
APx 08 604 5	800 V	0.6 mA	< 10	< 30	0.5 W	AP008604x05rk
APx 10 504 5	1 kV	0.5 mA	< 10	< 30	0.5 W	AP010504x05rk
APx 02 505 12	200 V	5 mA	< 10	< 30	1 W	AP002505x12rk
APx 04 255 12	400 V	2.5 mA	< 10	< 30	1 W	AP004255x12rk
APx 06 165 12	600 V	1.6 mA	< 10	< 30	1 W	AP006165x12rk
APx 08 125 12	800 V	1.2 mA	< 10	< 30	1 W	AP008125x12rk
APx 10 105 12	1 kV	1 mA	< 10	< 30	1 W	AP010105x12rk

Notes:
[1] I_{out} is limited to approx. 1.5 • I_{nom}
replacement characters: r – revision, k – customization (Without revision or customization, these digits are omitted)

Table 2: Technical data: Configurations

CONFIGURATION ORDER GUIDE (item code parts)						
AP	**002**	**255**	**P**	**05**	**0** [1]	**0** [1]
Type APS	V_{nom}	I_{nom} (nA)	Polarity	Input Voltage	Revision	Customized Version
	three significante digits • 100V For Example: 002 = 200V	two significante digits + number of zeros For Example: 255 = 2.5mA	P = positive N = negative	two significante digits For Example: 05 = 5 Volt 12 = 12 Volt	one digit 0 = no revision For Example: A = first revision B = second revision	one digit

Notes:
1) - Without revision or customization, these digits are omitted

Table 3: Technical data: Options and order information

3 Dimensional drawing

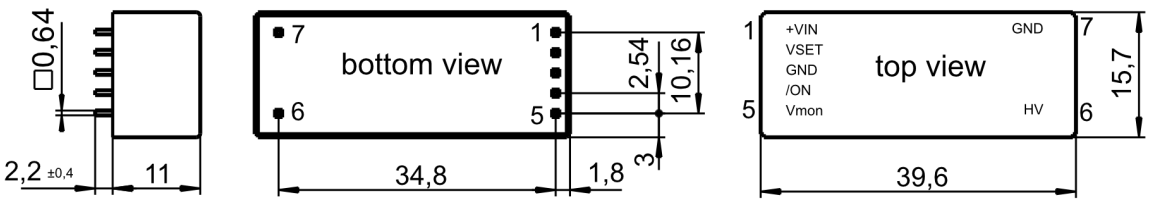

Figure 1: dimensional drawing APS

4 PIN assignment

PIN	NAME	DESCRIPTION	VALUE
1	**+VIN**	V_{in} Supply voltage	+5 V | +12 V
2	**VSET**	V_{set} Set voltage	0 ... 2.5 V | 0 ... 5 V
3/7	**GND**	Ground	
4	**/ON**	Signal ON	TTL-level: LOW or n.c. ➜ HV ON; HIGH ➜ HV OFF
5	**VMON**	V_{mon} Monitor voltage	0 ... 2.5 V | 0 ... 5 V
6	**HV**	V_{out} High voltage output	
Notes: Case is connected to GND			

Table 4: Technical data: options and order information

5 Control principle

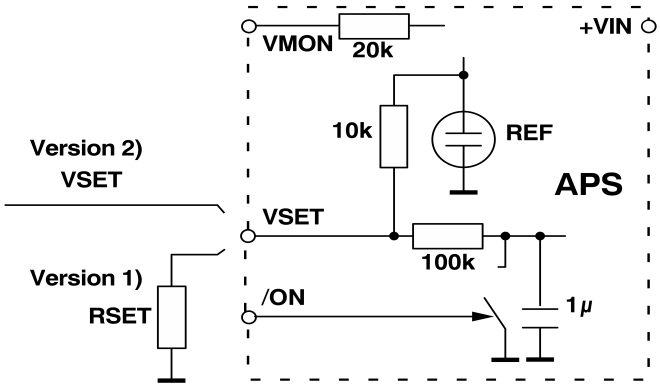

Figure 2: Control principle of APS HV supply series

Warranty & Service

This device is made with high care and quality assurance methods. The standard factory warranty is 12 months. Please contact the iseg sales department if you wish to extend the warranty.

CAUTION!

CAUTION!

Repair and maintenance may only be performed by trained and authorized personnel.

For repair please follow the RMA instructions on our website: www.iseg-hv.com/en/support/rma

Disposal

INFORMATION

INFORMATION

All high-voltage equipment and integrated components are largely made of recyclable materials. Do not dispose the device with regular residual waste. Please use the recycling and disposal facilities for electrical and electronic equipment available in your country.

Manufacturer contact

iseg Spezialelektronik GmbH
Bautzner Landstr. 23
01454 Radeberg / OT Rossendorf
GERMANY
FON: +49 351 26996-0 | FAX: +49 351 26996-21
www.iseg-hv.com | info@iseg-hv.de | sales@iseg-hv.de